Precise™ Glove Boxes

Protecting your laboratory environment

LABCONCO®

Precise™ Glove Boxes & XPert® Weigh Boxes
OVERVIEW

Table of Contents

Overview 3

Selection Guide 5

Precise HEPA-Filtered Glove Boxes & XPert Weigh Boxes

- Introduction 6
- Features & Benefits 7
- Precise HEPA-Filtered Glove Boxes Ordering Information 8
- XPert Weigh Boxes Ordering Information 9
- Dimensional Data 10
- Accessories 11
- Ducting Accessories 12
- FilterMate® Portable Exhausters & Accessories 12

Precise Basic & Controlled Atmosphere Glove Boxes

- Introduction 14
- Features & Benefits 15
- Precise Basic Glove Boxes Ordering Information 16
- Precise Controlled Atmosphere Glove Boxes Ordering Information 17
- Dimensional Data 18
- Accessories 19
- Drying Train Accessories 21

General Accessories 21

Base Stands 25

Base Cabinet & Accessories 26

Overview

A glove box is a sealed enclosure that allows handling of materials through long, relatively impermeable gloves secured to ports in the walls of the enclosure. The purpose of a glove box is protection or isolation, which is provided by the physical barrier.

Not all glove boxes are created equal. Glove box applications are as broad as the range of glove box types available in the market. Users may choose from basic enclosures constructed from flexible vinyl bags, to acrylic enclosures, to sophisticated custom "isolators" of welded stainless steel. Depending on the materials of construction and design, glove boxes provide varying levels of protection, durability and levels of containment.

A glove box has several components. The main chamber provides interior space where manipulation of the contents occurs via gloves. The window allows observation inside. The transfer chamber attached to the main chamber facilitates the introduction of apparatus and materials with minimum compromise of the glove box atmosphere, particularly important with controlled atmosphere glove boxes.

Other features differentiate one glove box type from another. To establish and maintain an interior atmosphere, controlled atmosphere glove boxes have inlet and outlet valves and gauges for evacuating and filling the main and transfer chambers with inert gas. HEPA filtered glove boxes use a built-in blower that circulates air through inlet and exhaust high efficiency particulate filters. They have a gauge to monitor HEPA filter loading.

Labconco manufactures a variety of glove boxes in two major categories:

The XPert Weigh Box protects the operator from hazardous powders.

HEPA filtered – Protects the operator from hazardous materials and/or establishes a "clean room" environment inside the box.

Controlled atmosphere – Isolates sensitive material inside the box from environmental contamination. Since the materials inside the box are often sensitive to oxygen or moisture, the ambient environment inside the box is replaced with an inert gas such as nitrogen, argon or helium. These glove boxes are sometimes called "dry boxes."

Precisely engineered and tested

Durable liner

Precise Glove Boxes are constructed of 1/4" thick, molded polyethylene. This extremely durable shell withstands exposure to most chemicals. Because the main chamber and transfer chamber shell is molded in one piece, cracks and crevices where leaks could occur or contaminants can hide are minimized. Unlike plastic used to construct some glove box windows, the laminated safety glass viewing window is not affected by organic solvents or ultraviolet rays.

Precise Glove Boxes are engineered and rigorously tested to exacting standards. Every Precise Glove Box is leak tested using a helium mass spectrometer. A test probe checks for the presence of leaks at all joints, seals and seams. Precise Controlled Atmosphere and Basic Glove Boxes achieve no detectable leaks greater than 1×10^{-4} ml/second, which calculates to a mere 8.6 ml/day. These Precise Boxes meet Class I atmosphere containment conditions and oxygen leak rates per ISO 10648-2 test method. Precise HEPA-Filtered Glove Boxes and XPert Weigh Boxes, with sealed inlet and outlet filters, have no detectable leaks greater than 1×10^{-3} ml/second, still only 86 ml/day.

Leak rates are especially important with the Precise Controlled Atmosphere Glove Box when sensitive materials demand a low level of oxygen and/or moisture. Two manual valves on the main chamber and two manual valves on the transfer chamber are used to evacuate and fill the chambers with inert gas to achieve these low levels. Two additional valves on the main chamber allow connection to an accessory Oxygen and Moisture Removal Column and diaphragm pump to achieve levels as low as 5 ppm oxygen and 50 ppm moisture.

Particulate cleanliness

Labconco tests the ability of the HEPA filters in Precise HEPA-Filtered and XPert Weigh Boxes to achieve particulate cleanliness within the main chamber, under both positive and negative pressure. As shipped, the boxes are under negative pressure. Using the accessory Positive Pressure Conversion Kit, the blower's positive pressure discharge can be rerouted to the inlet HEPA filter and the exit port of the exhaust filter opened to vent to the room. This configuration allows the main chamber to become a positively pressurized ultra clean room needed for applications such as nano-particle and electronic chip research. Airborne particulate cleanliness per ISO 14644-1 test method exceeds ISO Class 5 conditions

(equivalent to Class 100) and achieved ISO Class 3 conditions (equivalent to Class 1) at both minimum and maximum operational airflow volumes.

Particulate containment

Labconco measured the ability of Precise HEPA-Filtered Glove Boxes and XPert Weigh Boxes to contain powders. Naproxen sodium, a non-potent active pharmaceutical ingredient, was selected for the study because it is safe to handle, readily detectable in air at low concentrations, has a high dustiness quotient and challenging electrostatic properties. SafeBridge Consultants, Incorporated, analyzed the samples. The test results showed that the Precise HEPA-Filtered Glove Box and XPert Weigh Box demonstrated excellent containment when repeated small-scale weighing operations were performed in the glove boxes.

Excellent stability

As its name implies, the XPert Weigh Box was designed for weighing toxic powders. Since analytical balances may be sensitive to motion disturbance, the vibration of the XPert Weigh Box and the Precise HEPA-Filtered Glove Box was tested at both minimum and maximum airflow volumes. Less than 1.5×10^{-3} inches displacement was detected at the work surface at all blower speeds. The glove box was also tested using a five-place analytical balance placed inside with and without the balance vibration isolator (marble slab with stainless steel cover) positioned in the center of the work surface. The glove box was tested at various blower speeds and under typical laboratory conditions. No efforts were made to isolate the box from foot traffic or surrounding laboratory equipment. Results were excellent. The analytical balance readings remained stable to five decimal places.

Precisely what you want

Four models of Precise Glove Boxes are available:

The Precise HEPA-Filtered and XPert Weigh Boxes have a built-in blower and inlet and outlet HEPA filters to remove particulates that can negatively affect either the user or the materials inside. In addition, the XPert Weigh Box has a balance vibration isolator to stabilize a balance on the work surface and an anti-static ionizer fan to control static charge.

The Precise Basic Glove Box is ideal for simple applications needing a physical barrier or for users who want to add manual valves and other accessories as needed.

The Precise Controlled Atmosphere Glove Box has manual valves, a pressure relief valve and pressure gauges designed to achieve an inert atmosphere to protect sensitive materials.

Beyond selecting the right model of glove box, over 70 accessories allow you to customize your Precise Glove Box to fit your application needs. Use the Selection Guide on page 5 to find the model and accessories that fit your application.

The Precise Controlled Atmosphere Glove Box protects sensitive materials from oxygen and moisture contamination.

The Precise Basic Glove Box provides a physical barrier for a variety of applications.

Precise™ Glove Boxes & XPert® Weigh Boxes
SELECTION GUIDE

APPLICATIONS	RECOMMENDED GLOVE BOXES	REQUIRED ACCESSORIES*
Work with hazardous airborne particulates or powders	Precise HEPA-Filtered Glove Boxes, page 8	None additional needed
Cleanroom applications with materials sensitive to airborne particulates and requiring ISO Class 3 conditions	Precise HEPA-Filtered Glove Boxes, page 8, XPert Weigh Boxes, page 9	Positive Pressure Conversion Kit, page 11
Weighing potent fine powders	XPert Weigh Boxes, page 9	None additional needed Consider Blower Foot Switch, page 11, for hands-free control of blower when obtaining balance reading or manipulating fine powders
Procedures requiring a physical barrier with no air movement and/or multiple accessorizing options	Precise Basic Glove Boxes, page 16	None additional needed
Work with contamination-sensitive materials in controlled environment	Precise Controlled Atmosphere Glove Boxes, page 17	Direct Drive Rotary Vane Vacuum Pump, page 19 Gas and Vacuum Tubing Connection Kit, page 19
• with manual control achieving 10,000 ppm O_2 and 10,000 ppm H_2O	—	None additional needed
• with automatic control achieving 10,000 ppm O_2 and 10,000 ppm H_2O	—	Automatic Pressure Controller, page 19
• with automatic control and continuously achieving <5 ppm O_2 and <50 ppm H_2O	—	Automatic Pressure Controller, page 19 Oxygen and Moisture Removal Column and Stand, page 20 Oxygen and Moisture Removal Tubing Kit, page 20 Additional Drying Train accessories available, page 21

All Precise and XPert Weigh Boxes require a supporting base such as an Adjustable Height Base Stand or Base Cabinet with work surface.

Precise™ HEPA-Filtered Glove Boxes & XPert® Weigh Boxes

INTRODUCTION

Precise HEPA-Filtered Glove Boxes and XPert Weigh Boxes are leak-tight physical barriers with inlet and outlet HEPA filters to protect the operator from hazardous airborne particulates and powders. These boxes have uses in pharmaceutical research, nanotechnology and biochemistry. Microorganisms, low-level radiochemicals, chemical carcinogens and asbestos may also be used in these boxes. In addition, these boxes may be used for cleanroom applications requiring ISO Class 3 (ISO 14644-1) conditions.

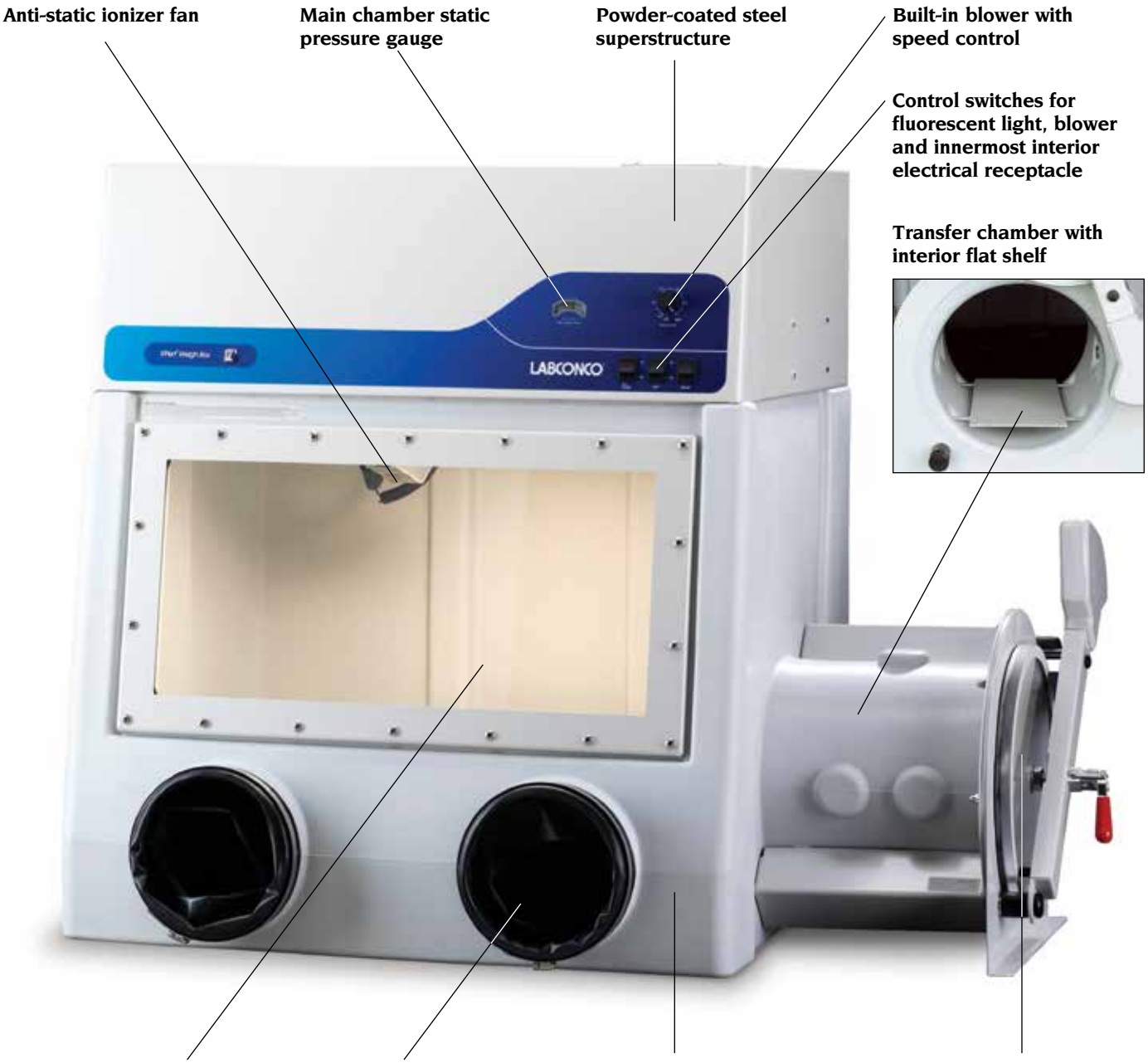

Exclusive Feature

Precise™ HEPA-Filtered Glove Boxes & XPert® Weigh Boxes

FEATURES & BENEFITS

One–piece, molded polyethylene liner provides a durable surface resistant to chemical corrosion and physical damage while simplifying cleaning with its coved interior corners.

Powder-coated steel superstructure, located above the glove box shell for utility placement, has superior corrosion resistance.

Laminated safety glass, 1/4" thick, with powder-coated steel frame and neoprene gasket for tight seal. Large access opening, 26.4" w x 12.5" high with removable window, allows for placement of large equipment.

Space-saving acrylic inner and outer transfer chamber doors pivot upward to save space and are counterbalanced and equipped with quick latches for easy operation.

Black, chemical-resistant phenolic core work surface prevents chemicals from staining the glove box floor, provides for easy clean-up and increases visibility of chemical powders.

Interior ceiling-mounted electrical duplex receptacle, with 5 amp maximum (100/115 volt models) or 2 amp maximum (230 volt models) circuit load, provides power for instruments inside the box.

Neoprene gloves, size 9 3/4, 30" long, are impermeable to water vapor, gases and toxic chemicals.

Built-in blower with speed control, capable of airflows from 13 CFM to 100 CFM, pulls room air through the inlet HEPA filter and discharges HEPA-filtered air back into the laboratory through the top of the box. This negative pressure operation ensures that all internally-contaminated air passes through the exhaust HEPA filter before returning to the laboratory.

Ducting options. These glove boxes are designed to return filtered air to the laboratory. If desired, an optional FilterMate Portable Exhauster may be installed via ductwork downstream of the exhaust to adsorb low levels of organic fumes, formaldehyde or ammonia gases. Alternatively, these glove boxes may be thimble ducted and exhausted to the outside using a remote-mounted blower.

22 watt fluorescent lamp illuminates the interior and is easily accessible from outside of the chamber.

Control switches for fluorescent light, blower and innermost interior electrical receptacle are conveniently located on the exterior control panel.

Exclusive Feature

Inlet and outlet HEPA filters, 99.99% efficient on 0.3 micron particulates, prevent contaminants from entering or leaving the glove box chamber.

Large internal work area offers approximately 13 cubic feet of interior space in main chamber.

Transfer chamber, 11.0" nominal ID x 12.0" long, includes interlocking flat shelf of powder-coated steel to allow objects to stand upright.

Leak-tight. Each box is factory-tested with a helium mass spectrometer while pressurized with helium at 5 inches of water gauge and found to have no detectable leaks greater than 1×10^{-3} ml/sec.

ETL-listed. All 115 volt, 60 Hz and 230 volt, 60 Hz models carry the ETL mark signifying that they are certified to UL 61010-1 and CAN/CSA C22.2 No 1010.1.

CE mark. All 230 volt, 50 Hz models conform to the CE (European Community) requirements for electrical safety and electromagnetic compatibility.

Main chamber static pressure gauge monitors HEPA filter loading.

Anti-static ionizer fan, mounted on the interior ceiling, reduces static charge during weighing operations. The fan comes standard with XPert Weigh Boxes and may be added as an accessory to any Precise Glove Box.

Balance vibration isolator, consisting of a 13.4" w x 20.4" d x 2.7" thick marble slab with isolator pads and type 304 stainless steel cover, provides a stable platform for sensitive weighing applications. The isolator comes standard with XPert Weigh Boxes and may be added as an accessory to any Precise Glove Box.

Performance tested to ASHRAE 110-1995.

Particulate-free ISO Class 3 air. Particulate counts in the work area conform to ISO 14644-1, providing ISO Class 3 conditions at both minimum and maximum operational airflow volumes (35 particulates at 0.5 micron size per cubic meter of air volume).

Excellent stability. The glove box produces less than 1.5 x 10 inches vibration displacement measured at the work surface at both minimum and maximum airflow volumes. Balance stability test results indicate no detectable instability of an analytical balance to five decimal places.

Full one-year warranty on parts and labor.

Over 70 optional accessories allow the glove box to be customized for individual applications. Accessories may be added as needs change and budgets allow.

Precise™ HEPA-Filtered Glove Boxes

ORDERING INFORMATION

Precise HEPA-*Filtered Glove Box* 5220200 *on Mobile Stand* 5235500.

All models feature:

- One-piece, molded, 1/4" thick polyethylene shell.
- Powder-coated steel superstructure.
- 1/4" thick, laminated safety glass viewing window with powder-coated steel frame and neoprene gasket, removable for loading equipment. Cutout is 26.4" w x 12.5" high.
- Space-saving inner and outer transfer chamber doors that pivot upward, are counterbalanced and equipped with quick-latches.
- Black, chemical-resistant phenolic core interior work surface sealed to the glove box floor.
- Interior ceiling-mounted electrical duplex receptacle with 5 amp maximum (100/115 volt models) or 2 amp maximum (230 volt models) circuit load.
- Pair of neoprene gloves, 0.15" thick, 30" long, size 9 3/4.
- Built-in blower with speed control capable of airflow from 13 CFM to 100 CFM.
- Fluorescent lamp, 22 watts, accessible from the top for bulb replacement.
- Switches for light, blower and innermost interior electrical receptacle.
- Inlet and outlet HEPA filters, 99.99% efficient on 0.3 micron particulates, and test port for challenging HEPA filter integrity.
- Main chamber static pressure gauge for monitoring HEPA filter loading.
- Approximately 13 cubic feet of interior space in main chamber, 33.5" w x 27.5" d maximum x 25.0" high.
- 11.0" nominal ID x 12.0" long transfer chamber.
- Transfer chamber interior interlocking shelf of powder-coated steel.
- 0.05 ppm average tracer gas levels or less detected during perimeter scan testing (surpasses ASHRAE 110 standards).
- Airborne particulate cleanliness (measured under positive and negative pressures per ISO 14644-1 test method) exceeds ISO Class 5 conditions (equivalent to Class 100) and achieved ISO Class 3 conditions (equivalent to Class 1) at both minimum and maximum operational airflow volumes.
- Vibration less than 1.5 x 10^{-5} inches displacement measured at the work surface at all airflow volumes.
- Balance stability to five decimal places on an analytical balance.
- Factory leak-tested with a mass spectrometer while pressurized with helium at 1 inch of water gauge. No detectable leaks greater than 1 x 10^{-3} ml/sec.
- Particulate containment data independently confirmed by SafeBridge Consultants Inc.
- ETL listing, UL 61010-1 and CAN/CSA C22.2 No. 1010.1 conformity (115 volt, 60 Hz and 230 volt, 60 Hz models).
- CE Conformity Marking (230 volt, 50 Hz models).

All models require:

- Supporting base. See pages 25-26 for Adjustable Height Base Stands or Work Surface and Protector Standard Base Cabinet.

Optional Accessories include:

See pages 11-13 *for ordering information on accessories for* HEPA-*filtered glove boxes.*

- Positive Pressure Conversion Kit, Recirculation Kit and Blower Foot Switch for airflow control.
- ULPA Filter, DOP Test Kit and other filter replacement accessories.
- Waste Port.
- Transfer Chamber Pressure Gauge Kit.
- Thimble Exhaust Duct Connectors, Hard Duct Exhaust Connector and Remote Wall-Mount Blower Kit for ducting.
- FilterMate Portable Exhauster and Carbon Filters to adsorb low levels of organic fumes, formaldehyde or ammonia gases.

See pages 21-24 *for ordering information on accessories for all glove boxes.*

- Add-A-Valve Kit.
- Electrical Power Strips and Electrical and Mechanical Pass-Through Kits.
- Acrylic Viewing Window.
- Anti-Static Ionizer Fans and Balance Vibration Isolator for weighing applications.
- Vacuum Aspirator Kits.
- Interior and Exterior Shelves and accessories.
- Glove Port Covers, Gloves, Sleeves and Hands.
- Remote Blowers.

Ordering Information

Catalog Number	Electrical Configuration	Shipping Wt. (lbs./kg)
5220200	115 volts, 60 Hz, 8 amps	280/127
5220220*	230 volts, 50 Hz, 4 amps	280/127
5220221	230 volts, 60 Hz, 4 amps	280/127
5220230*	100 volts, 50 Hz, 8 amps	280/127
5220231*	100 volts, 60 Hz, 8 amps	280/127

Exclusive Feature **International electrical configuration*

Blower Speed Control Dial Setting	Air Volume Changes Per Minute	Exhaust Volume (CFM)	Noise Pressure db(A)	Static Pressure in Glove Box (in. of H_2O)	Total System Static Pressure (in. of H_2O)
Min. Dial	1.0	13	44	0.14	0.34
20 Dial	1.5	20	48	0.17	0.51
40 Dial	3.3	43	48	0.45	1.32
50 Dial	4.7	61	65	0.68	1.81
60 Dial	6.2	80	68	0.80	2.14
80 Dial	7.2	93	70	0.89	2.38
Max. Dial	7.7	100	71	0.91	2.42

XPert® Weigh Boxes
ORDERING INFORMATION

XPert Weigh Box 5220300 on Stationary Stand 5235501.

All models feature:

- One-piece, molded 1/4" thick polyethylene shell.
- Powder-coated steel superstructure.
- 1/4" thick, laminated safety glass viewing window with powder-coated steel frame and neoprene gasket, removable for loading equipment. Cutout is 26.4" w x 12.5" high.
- Space-saving inner and outer transfer chamber doors that pivot upward, are counterbalanced and equipped with quick-latches.
- Black, chemical-resistant phenolic core work surface sealed to the glove box floor.
- Interior ceiling-mounted electrical duplex receptacle with 5 amp maximum (100/115 volt models) or 2 amp maximum (230 volt models) circuit load.
- Pair of neoprene gloves, 0.15" thick, 30" long, size 9 3/4.
- Built-in blower with speed control capable of airflow from 13 CFM to 100 CFM.
- Fluorescent lamp, 22 watts, accessible from the top for bulb replacement.
- Switches for light, blower and innermost interior electrical receptacle.
- Inlet and outlet HEPA filters, 99.99% efficient on 0.3 micron particulates, and test port for challenging HEPA filter integrity.
- Main chamber static pressure gauge for monitoring HEPA filter loading.
- Approximately 13 cubic feet of interior space in main chamber, 33.5" w x 27.5" d maximum x 25.0" high.
- 11.0" nominal ID x 12.0" long transfer chamber.
- Transfer chamber interior interlocking shelf of powder-coated steel.
- 0.05 ppm average tracer gas levels or less detected during perimeter scan testing (surpasses ASHRAE 110 standards).
- Airborne particulate cleanliness (measured under positive and negative pressures per ISO 14644-1 test method) exceeds ISO Class 5 conditions (equivalent to Class 100) and achieved ISO Class 3 conditions (equivalent to Class 1) at both minimum and maximum operational airflow volumes.
- Vibration less than 1.5 x 10^{-5} inches displacement measured at the work surface at all airflow volumes.
- Balance stability to five decimal places on an analytical balance.
- Factory leak-tested with a mass spectrometer while pressurized with helium at 1 inch of water gauge. No detectable leaks greater than 1 x 10^{-3} ml/sec.
- Particulate containment data independently confirmed by SafeBridge Consultants Inc.
- Anti-static ionizer fan, for mounting on the interior ceiling, to reduce static charge.
- Balance vibration isolator, consisting of a 13.4" w x 20.4" d x 2.7" thick marble slab with isolator pads and type 304 stainless steel cover.
- ETL listing, UL 61010-1 and CAN/CSA C22.2 No. 1010.1 conformity (115 volt, 60 Hz and 230 volt, 60 Hz models).
- CE Conformity Marking (230 volt, 50 Hz models).

All models require:

- Supporting base. See pages 25-26 for Adjustable Height Base Stands or Work Surface and Protector Standard Base Cabinet.

Optional Accessories include:

See pages 11-13 for ordering information on accessories for HEPA-filtered glove boxes.

- Positive Pressure Conversion Kit, Recirculation Kit and Blower Foot Switch for airflow control.
- ULPA Filter, DOP Test Kit and other filter replacement accessories.
- Waste Port.
- Transfer Chamber Pressure Gauge Kit.
- Thimble Exhaust Duct Connectors, Hard Duct Exhaust Connector and Remote Wall-Mount Blower Kit for ducting.
- FilterMate Portable Exhauster and Carbon Filters to adsorb low levels of organic fumes, formaldehyde or ammonia gases.

See pages 21-24 for ordering information on accessories for all glove boxes.

- Add-A-Valve Kit.
- Electrical Power Strips and Electrical and Mechanical Pass-Through Kits.
- Acrylic Viewing Window.
- Vacuum Aspirator Kits.
- Interior and Exterior Shelves and accessories.
- Glove Port Covers, Gloves, Sleeves and Hands.
- Remote Blowers.

Ordering Information

Catalog Number	Electrical Configuration	Shipping Wt. (lbs./kg)
5220300	115 volts, 60 Hz, 8 amps	350/159
5220320*	230 volts, 50 Hz, 4 amps	350/159
5220321	230 volts, 60 Hz, 4 amps	350/159
5220330*	100 volts, 50 Hz, 8 amps	350/159
5220331*	100 volts, 60 Hz, 8 amps	350/159

Exclusive Feature **International electrical configuration*

Blower Speed Control Dial Setting	Air Volume Changes Per Minute	Exhaust Volume (CFM)	Noise Pressure db(A)	Static Pressure in Glove Box (in. of H_2O)	Total System Static Pressure (in. of H_2O)
Min. Dial	1.0	13	44	0.14	0.34
20 Dial	1.5	20	48	0.17	0.51
40 Dial	3.3	43	48	0.45	1.32
50 Dial	4.7	61	65	0.68	1.81
60 Dial	6.2	80	68	0.80	2.14
80 Dial	7.2	93	70	0.89	2.38
Max. Dial	7.7	100	71	0.91	2.42

Precise™ HEPA-Filtered Glove Boxes & XPert® Weigh Boxes

DIMENSIONAL DATA

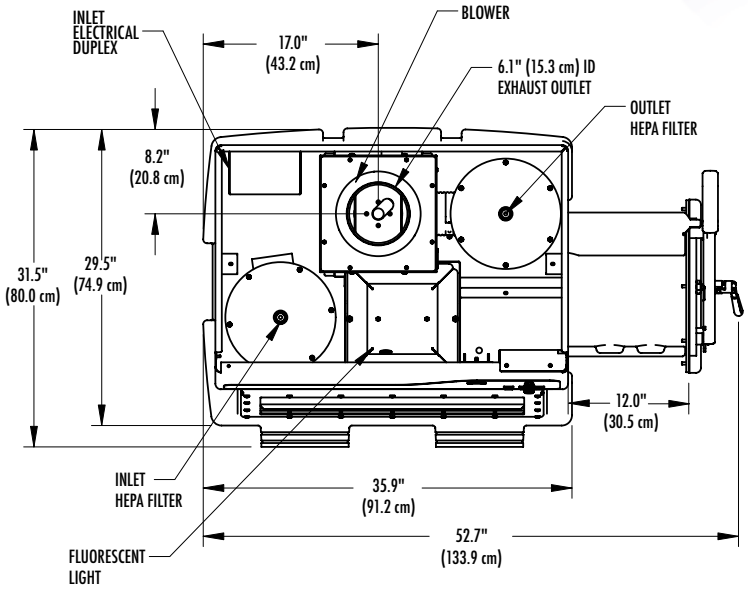

TOP

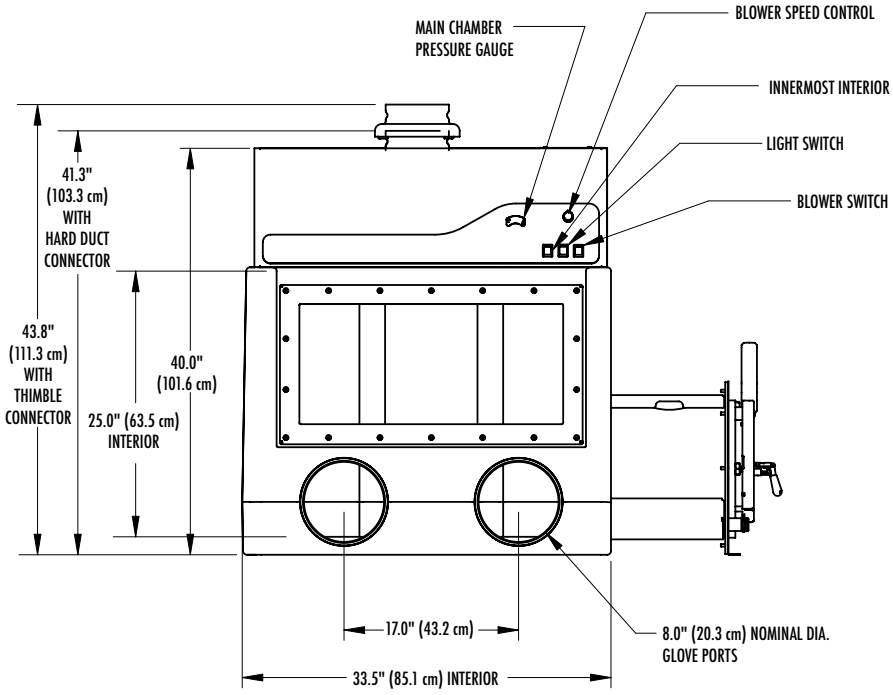

FRONT

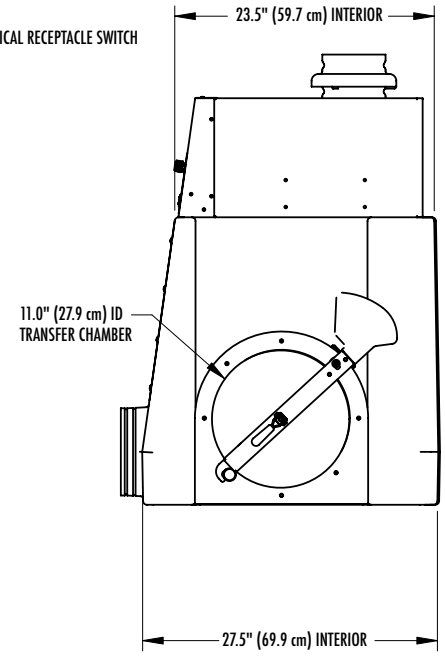

SIDE

Airflow Control

5236900 Positive Pressure Conversion Kit

Changes the built-in blower operation from standard negative pressure to positive pressure operation. The blower pushes instead of pulls HEPA filtered air through the main chamber. Typical applications for positive pressure operation include handling materials that are highly sensitive to airborne contaminants. The Positive Pressure Conversion Kit creates particulate cleanliness inside the box measured to ISO 14644-1 test method, achieving ISO Class 3 conditions (1 particle 0.5 µm or larger per cubic foot of air per minute). Includes hose, two clamps and harness assembly. Not recommended for use with applications involving hazardous substances. Shipping weight 6 lbs. (3 kg)

5236500 Recirculation Kit

Allows the built-in blower exhaust to be connected to the inlet HEPA filter, providing total recirculation of air volume useful for dry atmosphere operations. Includes hose, clamps and powder-coated steel adapter. Other accessories, such as Valves, Traps and Diaphragm Pumps, may be combined with the Recirculation Kit to maintain specific air chemistry conditions inside the main chamber. See page 21 for ordering information on Drying Train accessories. Shipping weight 5.5 lbs. (2.5 kg)

5241600 Blower Foot Switch

Provides a hands-free means to temporarily shut off power when obtaining sensitive balance readings or manipulating fine powders. Includes foot pedal and power cord. Shipping weight 4.5 lbs. (2 kg)

Filter Replacement and Testing

5225105 Replacement Inlet or Outlet HEPA Filter

99.99% efficient on 0.3 micron diameter particles. Shipping weight 6.5 lbs. (3 kg)

5225106 ULPA Filter

99.999% efficient on 0.12 micron diameter particles. May be used in place of standard inlet or outlet HEPA filter. Shipping weight 6.5 lbs. (3 kg)

5241700 Bag Set for Bag-in/Bag-out HEPA Filter Replacement

Includes two bags and two straps necessary for changing and disposing of one inlet or outlet filter. Shipping weight 1 lb. (0.5 kg)

5242400 DOP Test Kit for HEPA Filters

Includes the connections, hoses and test procedure necessary to conduct a HEPA filter test on both the inlet and outlet filter. Test should be performed by a qualified technician using calibrated equipment. Shipping weight 5 lbs. (2 kg)

Miscellaneous

5245800 Waste Port

Provides a 4.5" (11.4 cm) diameter pass-through port to attach an external waste bag. Rubber stopper plug is provided to close off the port from the inside of the glove box. Minimum waste bag size is 8.5" wide. **Requires 6.16" diameter drill hole. Requires waste bags and bands** (not included). Shipping weight 3 lbs. (1.4 kg)

5238100 Transfer Chamber Pressure Gauge Kit

Monitors pressure/vacuum from 0 to -29 inches of mercury. Includes the gauge, hose, mounting brackets, fittings and hardware. **Requires 0.562" diameter drill hole in back of transfer chamber.** Shipping weight 2 lbs. (1 kg)

Precise™ HEPA-Filtered Glove Boxes & XPert® Weigh Boxes

DUCTING ACCESSORIES

Thimble Exhaust Connectors

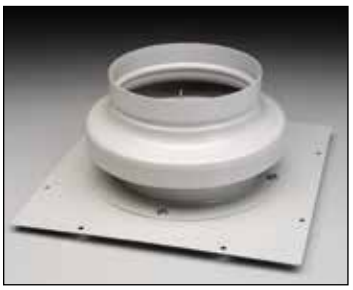

Powder-coated steel for connecting the glove box to ductwork attached to building exhaust, remote blower or FilterMate Portable Exhauster.

Catalog Number	Description	Shipping Weight
5230200	6" diameter. For connection to house exhaust or remote blower. See page 24.	10 lbs. (5 kg)
5241900	5" diameter. For connection to FilterMate Portable Exhauster. See below.	10 lbs. (5 kg)

5230400 Hard Duct Exhaust Connector

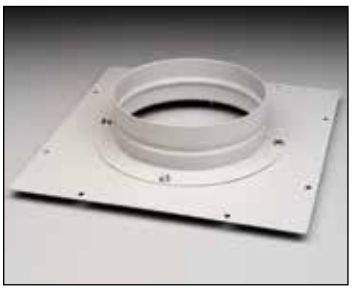

Powder-coated steel, 6" diameter, for connecting the glove box to ductwork attached to a remote blower. Remote blower must be balanced with glove box's built-in blower. **Requires ductwork and remote blower.** See page 24. Shipping weight 10 lbs. (5 kg)

5229800 Remote Wall-Mount Blower Kit

Provides powder-coated steel bracket, mounting hardware, 4" diameter x 6' long hose, hose clamps and 8' power cord extension for moving the integral blower from the glove box to a wall up to five feet away. Blower speed and on/off controls are accessible from the glove box front panel. Shipping weight 5 lbs. (2 kg)

Precise™ HEPA-Filtered Glove Boxes & XPert® Weigh Boxes

FILTERMATE® PORTABLE EXHAUSTERS & ACCESSORIES

An accessory for the Precise HEPA-Filtered Glove Box and XPert Weigh Box, the FilterMate Portable Exhauster uses a HEPA filter, carbon filter or a combination of both filters to remove hazardous powders, particulates or vapors from the exhaust air stream, returning filtered air to the environment. The negative pressure plenum surrounds the positive pressure impeller so that if a leak occurs, the unfiltered air is captured and refiltered. Each FilterMate consists of powder-coated steel housing with rubber feet; variable-speed, non-sparking motorized impeller; front-mounted power switch; rear-mounted auxiliary electrical receptacle; and IEC 3-wire electrical cord with plug. Includes 8 feet of 5" ID flexible gray polypropylene hose and two clamps. **Thimble Exhaust Connector 5241900 is required to connect glove box to the FilterMate.** Conforms to UL 61010-1 (115 volt models), CAN/CSA C22.2 No. 1010.1 (115 volt models) and CE Conformity Marking (230 volt models). Models 3970000, 3970020, 3970002, 3970022, 3970003 and 3970023 also feature HEPA filter, 99.99% efficient on particulates 0.3 micron in size; and true bag-in/bag-out filter disposal system for safely removing and replacing the filter without detaching the hose. Models 3970002 and 3970022 also feature a 6.1" ID thimble connection from the FilterMate to an existing house exhaust system for added safety. See ordering information on page 13.

FilterMate Portable Exhausters

Catalog Number	Filter Usage	Overall Dimensions	Electrical Requirements	Airflow Potential	Exhaust Connection	Shipping Weight lbs./kg
3970000	HEPA included	14.0" w x 23.0" d x 22.7" h	115 volts, 60 Hz	250 CFM	None. Room exhaust.	50/22.7
3970020*	HEPA included	35.6 cm w x 58.4 cm d x 57.7 cm h	230 volts, 50 Hz	250 CFM	None. Room exhaust.	50/22.7
3970001	Carbon required†	14.0" w x 23.0" d x 22.7" h	115 volts, 60 Hz	250 CFM	None. Room exhaust.	48/21.8
3970021*	Carbon required†	35.6 cm w x 58.4 cm d x 57.7 cm h	230 volts, 50 Hz	250 CFM	None. Room exhaust.	48/21.8
3970002	HEPA included	18.6" w x 23.0" d x 24.7" h	115 volts, 60 Hz	250 CFM	6.06" ID Thimble to outside	54/24.5
3970022*	HEPA included	47.2 cm w x 58.4 cm d x 57.7 cm h	230 volts, 50 Hz	250 CFM	6.06" ID Thimble to outside	54/24.5
3970003	HEPA included†† Carbon required†	14.9" w x 23.0" d x 22.7" h	115 volts, 60 Hz	200 CFM	None. Room Exhaust.	52/23.6
3970023*	HEPA included†† Carbon required†	37.8 cm w x 58.4 cm d x 57.7 cm h	230 volts, 50 Hz	200 CFM	None. Room Exhaust.	52/23.6
3970004	Two Carbon required†	14.9" w x 23.0" d x 22.7" h	115 volts, 60 Hz	200 CFM	None. Room Exhaust.	52/23.6
3970024*	Two Carbon required†	37.8 cm w x 58.4 cm d x 57.7 cm h	230 volts, 50 Hz	200 CFM	None. Room Exhaust.	52/23.6

**International electrical configuration* †*Carbon Filter(s) not included.* ††*HEPA filter may be removed and substituted with a second carbon filter.*

Whether or not the FilterMate would be appropriate for your application requires consideration of factors such as the time-weighted exposure limits of your materials. Using Labconco's exclusive Chemical Assessment Program, our technical specialists can help you determine if the Precise or XPert Weigh Box with FilterMate Portable Exhauster is the right product for your application and, if so, estimate filter life. To begin the process, please complete the Chemical Usage Assessment Form available on our website at: ***www.labconco.com/chemical_usage.html*** *or call us at* **800-821-5525** *or* **816-333-8811.**

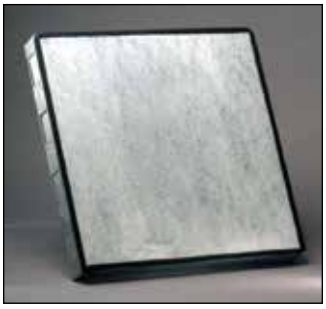

Organic Carbon Filter 3923400

Replacement HEPA *Filter* 3707900

Filters & Accessories Ordering Information

Catalog Number	Description	Shipping Weight lbs./kg
3923400	Organic Carbon Filter, Type AC. Contains 12 pounds of granular activated carbon media suitable for organic solvents including acetone, ethyl acetate, toluene and xylene.	13/6
3923401	Formaldehyde Carbon Filter, Type CI. Contains 14 pounds of impregnated carbon media suitable for vapors from formaldehyde.	17/8
3923402	Ammonia Carbon Filter, Type CX. Contains 16 pounds of impregnated carbon media suitable for ammonia and low molecular weight amines.	21/10
6924900	Syringe Kit for carbon saturation detection. Contaminant detector tubes sold separately.	1/0.5
6926000	Formaldehyde Detector Tubes, package of 3.	1/0.5
6925700	Ammonia Detector Tubes, package of 3.	1/0.5
3707900	Replacement HEPA Filter, 99.99% efficient on particles 0.3 micron in size. Not suitable for use with biohazardous materials or volatile organic material.	10/5
3776002	Replacement Bag for Bag-In/Bag-Out HEPA Filter to contain particulate matter during filter changing.	1/0.5

Precise™ Basic & Controlled Atmosphere Glove Boxes

INTRODUCTION

Precise Basic and Controlled Atmosphere Glove Boxes provide a leak-tight environment for work with contamination-sensitive materials. Precise Basic Glove Boxes are simple, economical boxes that provide a draft-free environment with a physical barrier and may be customized with accessories to meet specific applications. Precise Controlled Atmosphere Glove Boxes have valves for evacuating and filling the chambers as well as drying train connections to achieve low oxygen levels for work with organometallics, alternative energy cells or hydro-philic chemicals. Oxygen levels as low as 5 ppm and moisture levels as low as 50 ppm may be achieved.

Exclusive Feature

Precise™ Basic & Controlled Atmosphere Glove Boxes

FEATURES & BENEFITS

One–piece molded, medium-density polyethylene liner provides a durable surface resistant to chemical corrosion and physical damage while simplifying cleaning with its coved interior corners.

Powder-coated steel superstructure, located above the glove box shell for utility placement, has superior corrosion resistance.

Laminated safety glass, 1/4" thick, with powder-coated steel frame and neoprene gasket for tight seal. Large access opening, 26.4" w x 12.5" high with removable window, allows for placement of large equipment.

Space-saving acrylic inner and outer transfer chamber doors pivot upward to save space and are counterbalanced and equipped with quick latches for easy operation.

Black, chemical-resistant phenolic core work surface prevents chemicals from staining the glove box floor, provides for easy clean-up and increases visibility of chemical powders.

Interior ceiling-mounted electrical duplex receptacle, with 5 amp maximum (100/115 volt models) or 2 amp maximum (230 volt models) circuit load, provides power for instruments inside the box.

Neoprene gloves, size 9 3/4, 30" long, are impermeable to water vapor, gases and toxic chemicals.

22 watt-fluorescent lamp illuminates the interior and is easily accessible from outside of the chamber.

Control switches for fluorescent light and innermost interior electrical receptacle are conveniently located on the exterior control panel.

Large internal work area offers approximately 13 cubic feet of interior space in main chamber.

Six manual valves with 3/8" compression fittings and 3/8" hose barbs. Two valves are located both on the main chamber and transfer chamber for evacuating and re-filling the chambers via a vacuum pump and inert gas. The remaining two valves on the main chamber can be connected to a continuously recirculating oxygen and moisture removal system — creating and preserving levels of 1 to 5 ppm oxygen. Six manual valves come standard on Precise Controlled Atmosphere Glove Boxes and may be added to Precise Basic Glove Boxes.

Main chamber pressure gauge monitors pressures between -5 to +5 inches of water gauge. The gauge comes standard on Precise Controlled Atmosphere Glove Boxes and may be added to Precise Basic Glove Boxes.

Pressure relief valve activates at +/-6 inches water gauge, preventing damage to the window should internal pressure exceed operational limits. The relief valve comes standard on Precise Controlled Atmosphere Glove Boxes and may be added to Precise Basic Glove Boxes.

Transfer chamber, 11.0" nominal ID x 12.0", includes interlocking flat shelf of powder-coated steel to permit objects to stand upright. Precise Controlled Atmosphere Gloves include a powder-coated steel high vacuum sleeve to allow transfer chamber evacuation without distortion. The sleeve is an optional accessory for Precise Basic Glove Boxes.

Transfer chamber pressure gauge monitors pressure/vacuum from 0 to -29 inches of mercury. The gauge comes standard on Precise Controlled Atmosphere Glove Boxes and may be added to Precise Basic Glove Boxes.

Low oxygen and moisture levels maintained. Oxygen levels as low as 5 ppm and moisture levels as low as 50 ppm may be achieved and maintained. A variety of oxygen and moisture removal accessories are offered to achieve the levels desired.

Leak-tight. Each box has been factory-tested with a helium mass spectrometer while pressurized with helium at 5 inches of water gauge and found to have no detectable leaks greater than 1×10^{-4} ml/sec.

Meets Class 1 atmosphere containment conditions for oxygen leak rates per ISO 10648-2 test method.

ETL-listed. All 115 volt, 60 Hz and 230 volt, 60 Hz models carry the ETL mark signifying that they are certified to UL 61010-1 and CAN/CSA C22.2 No 1010.1.

CE mark. All 230 volt, 50 Hz models conform to the CE (European Community) requirements for electrical safety and electromagnetic compatibility.

Full one-year warranty on parts and labor.

Over 70 optional accessories allow the glove box to be customized for individual applications. Accessories may be added as needs change and budgets allow.

Exclusive Feature

Precise™ Basic Glove Boxes
ORDERING INFORMATION

Precise Basic Glove Box 5220000 on Mobile Stand 5235500.

Intertek

All models feature:

- One-piece molded, medium-density polyethylene shell.
- Powder-coated steel superstructure.
- 1/4" thick, laminated safety glass viewing window with powder-coated steel frame and neoprene gasket, removable for loading equipment. Cutout is 26.4" w x 12.5" high.
- Space-saving inner and outer transfer chamber doors that pivot upward, are counterbalanced and equipped with quick-latches.
- Black, chemical-resistant phenolic core work surface sealed to the glove box floor.
- Interior ceiling-mounted electrical duplex receptacle with 5 amp maximum (100/115 volt models) or 2 amp maximum (230 volt models) circuit load.
- Pair of neoprene gloves, 0.15" thick, 30" long, size 9 3/4.
- Fluorescent lamp, 22 watts, accessible from the top for bulb replacement.
- Switches for light and innermost interior electrical receptacle.
- Approximately 13 cubic feet of interior space in main chamber, 33.5" w x 27.5" d maximum x 25.0" high.
- 11.0" nominal ID x 12.0" long transfer chamber.
- Factory leak-tested with a mass spectrometer while glove box is pressurized with helium at 5 inches of water gauge. No detectable leaks greater than 1 x 10^{-4} ml/sec.
- Meet Class 1 atmosphere containment conditions for oxygen leak rates per ISO 10648-2 test method.
- Transfer chamber interior interlocking shelf of powder-coated steel.
- ETL listing, UL 61010-1 and CAN/CSA C22.2 No. 1010.1 conformity (115 volt and 230 volt, 60 Hz models).
- CE Conformity Marking (230 volt, 50 Hz models).

All models require:

- Supporting base. See pages 25-26 for Adjustable Height Base Stands or Work Surface and Protector Standard Base Cabinet.

Optional Accessories include:

See pages 19-21 for ordering information on accessories for Precise Basic and Controlled Atmosphere Glove Boxes.

- Rotary Vane Vacuum Pumps, Automatic Pressure Controllers, Tubing, Valve Kits, Pressure Gauges and Transfer Chamber High Vacuum Sleeve for evacuating and filling operations.
- Pressure Relief Valve and Vent Kits.
- Column, Stand and Tubing for low oxygen and moisture level removal.
- Moisture Monitors and Hygrometer.
- Oxygen Monitors.
- Traps, Tubing, Flowmeter, Diaphragm Pumps and other drying train accessories.

See pages 21-24 for ordering information on accessories for all glove boxes.

- Electrical Power Strips and Electrical and Mechanical Pass-Through Kits.
- Acrylic Viewing Window.
- Vacuum Aspirator Kits.
- Interior and Exterior Shelves and accessories.
- Glove Port Covers, Gloves, Sleeves and Hands.
- Remote Blowers to exhaust the pressure relief valve.

Ordering Information

Catalog Number	Electrical Configuration	Shipping Wt. (lbs./kg)
5220000	115 volts, 60 Hz, 8 amps	255/116
5220020*	230 volts, 50 Hz, 4 amps	255/116
5220021	230 volts, 60 Hz, 4 amps	255/116
5220030*	100 volts, 50 Hz, 8 amps	255/116
5220031*	100 volts, 60 Hz, 8 amps	255/116

Exclusive Feature **International electrical configuration*

Precise™ Controlled Atmosphere Glove Boxes

ORDERING INFORMATION

Precise Controlled Atmosphere Glove Box 5220100 on Mobile Stand 5235500.

Intertek

All models feature:

- One-piece molded, medium-density polyethylene shell.
- Powder-coated steel superstructure.
- 1/4" thick, laminated safety glass viewing window with powder-coated steel frame and neoprene gasket, removable for loading equipment. Cutout is 26.4" w x 12.5" high.
- Space-saving inner and outer transfer chamber doors that pivot upward, are counterbalanced and equipped with quick-latches.
- Black, chemical-resistant phenolic core work surface sealed to the glove box floor.
- Pressure relief valve that activates at pressure/vacuum above 6 inches or below -6 inches of water gauge.
- Interior ceiling-mounted electrical duplex receptacle with 5 amp maximum (100/115 volt models) or 2 amp maximum (230 volt models) circuit load.
- Pair of neoprene gloves, 0.15" thick, 30" long, size 9 3/4.
- Fluorescent lamp, 22 watts, accessible from the top for bulb replacement.
- Switches for light and innermost interior electrical receptacle.
- Approximately 13 cubic feet of interior space in main chamber, 33.5" w x 27.5" d maximum x 25.0" high.
- 11.0" nominal ID x 12.0" long transfer chamber.
- Factory leak-tested with a mass spectrometer while glove box is pressurized with helium at 5 inches of water gauge. No detectable leaks greater than 1 x 10^{-4} ml/sec.
- Performance tested to maintain less than 5 ppm oxygen levels and less than 50 ppm moisture levels.
- Meet Class I atmosphere containment conditions for oxygen leak rates per ISO 10648-2 test method.
- Six manual valves with 3/8" compression fittings and 3/8" hose barbs. Two on the main chamber and two on the transfer chamber are for purging and filling. The other two on the main chamber are for drying train connections.
- Main chamber pressure gauge with readings from -5 to +5 inches of water gauge.
- Transfer chamber pressure gauge with readings from 0 to -29 inches of mercury.
- Transfer chamber high vacuum sleeve and interior interlocking shelf of powder-coated steel.
- ETL listing, UL 61010-1 and CAN/CSA C22.2 No. 1010.1 conformity (115 volt and 230 volt, 60 Hz models).
- CE Conformity Marking (230 volt, 50 Hz models).

All models require:

- Supporting base. See pages 25-26 for Adjustable Height Base Stands or Work Surface and Protector Standard Base Cabinet.
- Vacuum source for evacuating. See page 19 for Rotary Vane Vacuum Pumps.
- Inert gas for filling. Contact your laboratory supply distributor.

Optional Accessories include:

See pages 19-21 for ordering information on accessories for Precise Basic and Controlled Atmosphere Glove Boxes.

- Pressure Relief Valve Vent Kits.
- Automatic Pressure Controllers, Tubing and Valve Kits for evacuating and filling operations.
- Column, Stand and Tubing for low oxygen and moisture level removal.
- Moisture Monitors and Hygrometer.
- Oxygen Monitors.
- Traps, Tubing, Flowmeter, Diaphragm Pumps and other drying train accessories.

See pages 21-24 for ordering information on accessories for all glove boxes.

- Electrical Power Strips and Electrical and Mechanical Pass-Through Kits.
- Acrylic Viewing Window.
- Vacuum Aspirator Kits.
- Interior and Exterior Shelves and accessories.
- Glove Port Covers, Gloves, Sleeves and Hands.
- Remote Blowers to exhaust the pressure relief valve.

Ordering Information

Catalog Number	Electrical Configuration	Shipping Wt. (lbs./kg)
5220100	115 volts, 60 Hz, 8 amps	260/118
5220120*	230 volts, 50 Hz, 4 amps	260/118
5220121	230 volts, 60 Hz, 4 amps	260/118
5220130*	100 volts, 50 Hz, 8 amps	260/118
5220131*	100 volts, 60 Hz, 8 amps	260/118

Exclusive Feature **International electrical configuration*

Precise™ Basic & Controlled Atmosphere Glove Boxes

DIMENSIONAL DATA

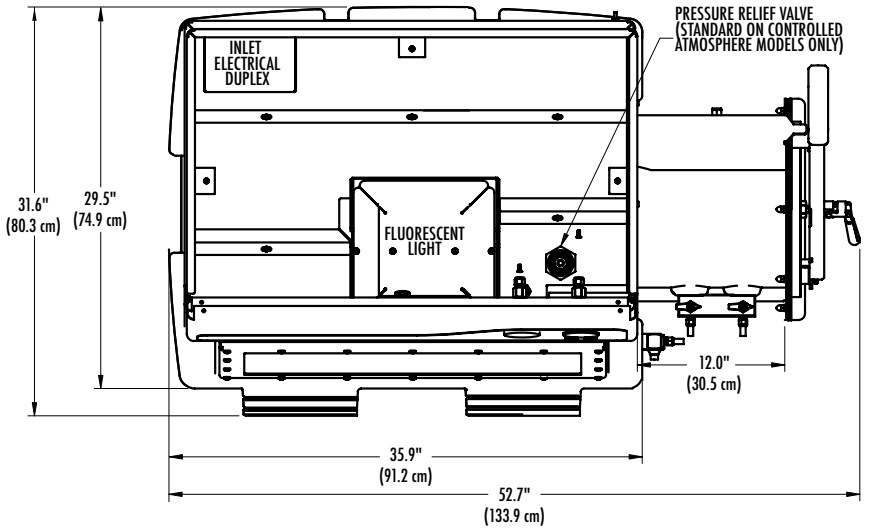

TOP

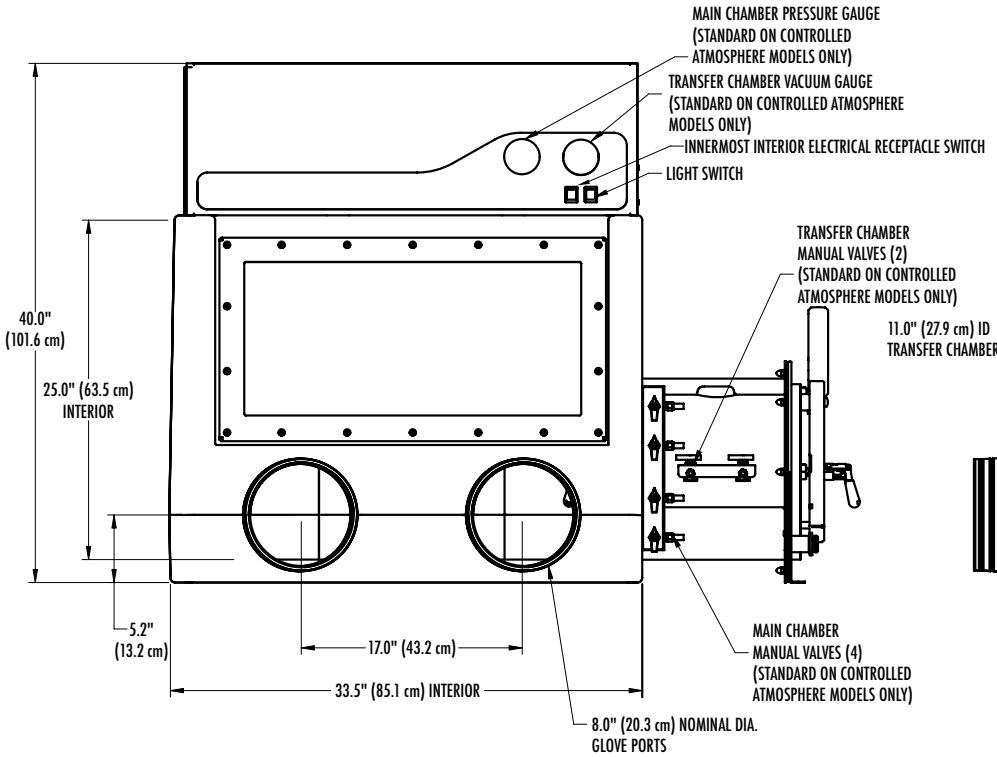

FRONT

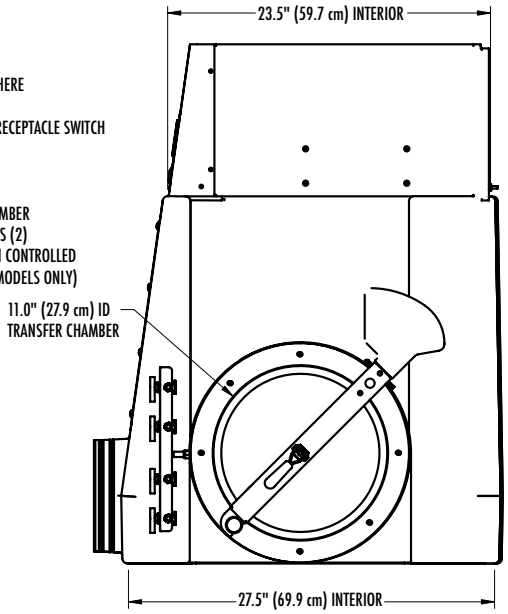

SIDE

Evacuation and Filling

Direct Drive Rotary Vane Vacuum Pumps

For evacuating the main chamber and/or transfer chamber. Ultimate vacuum (total pressure) is 2 x 10^{-3} mBar (1.5 micron). Consist of on/off switch; two inlet adapters (1/2" and 3/4" OD); mode selector with High Vacuum and High Throughput positions; and gas ballast with closed, low flow and high flow positions. Single phase, direct drive motor, totally enclosed and fan cooled. Thermal overload device switches off the pump when overheated and automatically restarts when cooled. Isolation valve seals the inlet and prevents oil and air contamination of the system in the event of a power failure. Constructed of cast aluminum casing with lift handle and rubber feet. Include four bottles (1 liter each) of vacuum pump oil, one exhaust filter with oil mist and odor filter elements. Dimensions: 6.5" w x 17.0" d x 10.4" high.

Catalog Number	Electrical Configuration	Displacement At 60 Hz (50 Hz) liters/minute	Shipping Weight lbs. (kg)
1472100	115 volts, 50/60 Hz, 4.6 A Includes 115 volt NEMA 5-15P plug.	117 (98)	62 (28)
7739400	230 volts, 50/60 Hz, 2.4 A Includes 230 volt NEMA 6-15P plug.	117 (98)	62 (28)
7739402	230 volts, 50/60 Hz, 2.4 A Includes 230 volt reverse IEC plug.	117 (98)	62 (28)

Automatic Pressure Controllers

For automatic control of the main chamber pressure (-5 to +5 inches of water gauge), main chamber purging and filling cycles (up to 199 cycles), and transfer chamber evacuation and filling cycles (up to 199 cycles). Regulate vacuum/pressure between -5 and +5 inches of water gauge in the main chamber and between 0 and -29 inches of mercury in the transfer chamber. A mutable, audible alarm sounds when pressure/vacuum level is outside set limits. Consist of powder-coated steel casing with a front panel LCD display and a rear panel with power switch, power inlet connection with circuit breakers, electrical receptacle for connection to vacuum pump (sold separately), electrical connection for foot pedal, two solenoid valves for controlling gas in and gas/ vacuum out to transfer chamber, and two solenoid valves for controlling gas in and gas/vacuum out to main chamber. Unit of measure display options are inches of water, inches of mercury, and mBar. A three-position foot pedal (increase gas/ fill, off, evacuate/decrease gas) provides hands-free control of the gas inlet and vacuum outlet valves. Designed for mounting atop the transfer chamber exterior. Include mounting bracket, hardware, 3/16" ID polyvinyl tubing, 3/32" ID polyvinyl tubing, and power cord with plug. **Requires installation.**

Catalog Number	Description	Shipping Weight
5238600	For 100/115 volt, 50/60 Hz operation	20 lbs. (9 kg)
5238601	For 230 volt, 50/60 Hz operation	20 lbs. (9 kg)

Gas and Vacuum Tubing Connection Kits

Include the flexible vinyl tubing and fittings necessary to connect user-supplied inert gas supply tank and rotary vane vacuum pump to valves located on the glove box.

Catalog Number	Description	Use With	Shipping Weight
5245100	Manual Valve Gas and Vacuum Tubing Connection Kit	Manual Valves	2 lbs. (0.9 kg)
5245200	Automatic Pressure Controller Gas and Vacuum Tubing Connection Kit	5238600 5238601	2 lbs. (0.9 kg)

5232101 Complete Valve Kit

Includes six each manual ball valves, pressure relief valve, compression fittings, hose connector fittings, holesaws, O-rings and nuts to add four service valves to the main chamber and two service valves to the transfer chamber. Two of the valves on the main chamber and two on the transfer chamber may be used for evacuating and filling. The remaining two on the main chamber are for drying train connections. **Requires installation.** Precise Controlled Atmosphere Glove Boxes include six manual valves. Shipping weight 20 lbs. (9 kg)

5225701 Add-A-Valve Kit

Includes the manual ball valve, compression fitting, hose connector fitting, O-ring and nut to add a service valve to the main chamber or transfer chamber. **Requires installation and 0.688" diameter hole.** See Add-A-Valve Installation Kit on page 22. Precise Controlled Atmosphere Glove Boxes include six manual valves. Shipping weight 1 lb. (0.5 kg)

5236600 Valve Identifier Label Set

Includes labels for two VAC, GAS, IN, OUT, AR, NIT, AIR, CO2 and CW. For use when adding service valve(s). Shipping weight 0.5 lb. (0.3 kg)

5237800 Main Chamber Pressure Gauge Kit

Monitors pressures between -5 and +5 inches of water gauge. Includes pressure gauge, hose and fittings. **Requires installation and 0.562" diameter hole.** Included with Precise Controlled Atmosphere Glove Boxes. Shipping weight 3 lbs. (1.4 kg)

5237900 Transfer Chamber Pressure Gauge Kit

Monitors pressures between 0 and -29 inches of mercury. Mounts atop the glove box. Includes vacuum gauge, hose, mounting bracket and fittings. **Requires installation and 0.562" diameter hole.** Included with Precise Controlled Atmosphere Glove Boxes. Shipping weight 2 lbs. (0.9 kg)

5236200 Transfer Chamber High Vacuum Sleeve

Powder-coated steel cylinder fits inside the transfer chamber to reinforce the walls of the transfer chamber under high vacuum conditions. Included with the Precise Controlled Atmosphere Glove Boxes. Shipping weight 10 lbs. (4.5 kg)

Pressure Relief

5230600 Pressure Relief Valve

Activates at +/-6 inches water gauge to prevent over or under pressurization of the main chamber. Included with Precise Controlled Atmosphere Glove Boxes and 5232101 Complete Valve Kit. **Requires installation and a 2.06" diameter hole.** Shipping weight 2 lbs. (0.9 kg)

Pressure Relief Vent Kits

Provide the components necessary to exhaust the pressure relief valve during overpressurization. **Require 5230600 Pressure Relief Valve (included with Precise Controlled Atmosphere Glove Boxes) and outside ducting.** Include 3.9" OD x 3.8" ID thimble connection, gasket, two elbows, four clamps and 13" long tubing. Ductwork for outside venting is not included.

Catalog Number	Description	Shipping Weight
5242700	**Pressure Relief Vent Kit.** Outside ducting is required.	5 lbs. (2 kg)
5238500	**HEPA-Filtered Pressure Relief Vent Kit.** Includes 99.99% efficient HEPA Filter. For ducting to the outside or room. May be used with 5241200 Carbon-Filtered Vent Kit.	10 lbs. (5 kg)
5241200	**Carbon-Filtered Pressure Relief Vent Kit.** Includes activated carbon filter. For ducting to outside or room. May be used with 5238500 HEPA-Filtered Pressure Relief Vent Kit.	15 lbs. (7 kg)

Moisture Monitoring

Moisture Monitors/Hygrometers

For placement inside the main chamber to continuously monitor moisture levels. Measure absolute moisture content in gas. Detect levels from 0 to 10,000 ppm (with three ranges of 0-100 ppm, 100-1000 ppm, and 1000-10,000 ppm) with +/-1 percent accuracy. Consist of chemically-inert ceramic technology moisture sensor, sampling block, digital display monitor, sampling pump, switching power supply and on/off switch.

Catalog Number	Electrical Configuration	Shipping Weight
5244900	100/115 volt, 50/60 Hz operation	13 lbs. (6 kg)
5244901	230 volt, 50/60 Hz operation	13 lbs. (6 kg)

5244800 Hand-held Digital Hygrometer

Battery-operated instrument measures both percent relative humidity from 0-100% with +/-2% accuracy and temperature in ° F or ° C with +/-1° F (+/-0.5° C) accuracy. Calculates the dew point temperature and wet bulb temperature based on the relative humidity and temperature readings. Minimum and maximum temperature and relative humidity readings may be stored in memory. Hold function freezes reading. Memory function stores up to 25 sample readings. Includes 9 volt alkaline battery. Shipping weight 1.5 lbs. (0.7 kg)

Oxygen Monitoring

Oxygen Monitors, 0-10,000 ppm

For detecting trace oxygen levels using an electrochemical sensor. Provide a digital readout in three measurement ranges of 0-100 ppm, 100-1000 ppm and 1000-10,000 ppm. Accuracy is +/-1% of full scale. Readout displays on 4 1/2 digit LCD. Equipped with three user- configurable oxygen alarm relays and one user configurable status alarm relay. Include audible alarm and three front panel LED visual alarms. 4-20 mADC and 0-2 VDC analog outputs. Casing is watertight polycarbonate with gasketed seals. Gas inlet and outlet connections are 1/4" stainless steel compression fittings. Dimensions: 8.3" w x 6.2" d x 10.9" high.

Catalog Number	Electrical Configuration	Shipping Weight
5244500	100/115 volt, 50/60 Hz operation	13 lbs. (6 kg)
5244501	230 volt, 50/60 Hz operation	13 lbs. (6 kg)

5244400 Oxygen Monitor, 0.1-100%

Oxygen Monitor measures percent of oxygen inside the glove box using a chemically-resistant electrochemical sensor. Front LCD panel displays percentage from 0.1 to 100%. Includes interconnecting sensor cable and power cord for connection to the glove box's interior electrical receptacle. An "O" ring is provided to help form a gas-tight seal. Measurement range is 0.1 to 100% oxygen (±1% of full scale at 77° F and 29.92" Hg). Rated for general purpose service as low as 1000 ppm (0.1%). Mounting bracket is provided for hanging from Rear Interior Shelf Kit 5235000 (sold separately). For 115/230 volt, 50/60 Hz operation. Shipping weight 3.5 lbs. (1.6 kg)

Low Oxygen and Moisture Level Removal

Oxygen and Moisture Removal Column and Stand

Expendable catalyst column (copper and molecular sieve) reduces oxygen level to less than 5 ppm and moisture level to less than 50 ppm. 7 liters O_2 capacity and 100 grams H_2O capacity. **Requires connection to two manual valves on the main chamber and a diaphragm vacuum pump for atmosphere oxygen/moisture removal and recirculation.** Cannot be regenerated. Optional Stand cradles column on its side.

Catalog Number	Description	Shipping Weight
5244200	Oxygen and Moisture Removal Column	26 lbs. (12 kg)
5244300	Stand for Column	4.5 lbs. (2 kg)

5242501 Oxygen and Moisture Removal Tubing Kit

Includes 25' fluorinated ethylene propylene (FEP) tubing, eight tube inserts and two connectors to connect the Oxygen and Moisture Removal Column to diaphragm pump. Shipping weight 3 lbs. (1.4 kg)

See Moisture & Solvent Trap Insert for moisture removal only, Diaphragm Vacuum Pumps and other Drying Train components on page 21.

Precise™ Basic & Controlled Atmosphere Glove Boxes

DRYING TRAIN ACCESSORIES

Drying Train Accessories

A chemical trap to remove organic solvents, acids, ammonia, radioisotopes or moisture may be added to any Precise or XPert Box. The trap is connected to two main chamber service valves and a diaphragm pump for recirculation of the main chamber atmosphere and contaminant removal. Precise Controlled Atmosphere Glove Boxes include main chamber service valves. For all other boxes, **two valves are required.** See the Add-A-Valve Kit and Complete Valve Kit described on pages 19 and 22.

Catalog Number	Description	Shipping Weight
7815301	**Canister with Stand** accommodates any trap insert listed below. Clear polypropylene canister allows visual inspection of trap contents.	5 lbs. (2.3 kg)
7815200	**Moisture & Solvent Trap Insert.** Contains molecular sieve to provide less than 50 ppm moisture.	4 lbs. (2 kg)
7814800	**Acid Trap Insert.** Contains acid neutralizing desiccant that changes from off-white to purple when exhausted.	4 lbs. (2 kg)
7815000	**Radioisotope Trap Insert.** Contains activated carbon.	4 lbs. (2 kg)
7995600	**Ammonia Trap Insert.** Contains impregnated carbon.	4 lbs. (2 kg)

5242500 Drying Train Tubing Kit
Includes 25' fluorinated ethylene propylene (FEP) tubing and eight tube inserts to connect drying train components. Shipping weight 3 lbs. (1.4 kg)

5244100 Flowmeter
For inline drying train connection to provide visual confirmation of drying train circulation. Shipping weight 2.5 lbs. (1.1 kg)

5240100 Gas and Vacuum 0.2 Micron Filter
Traps particulates. For drying train or vacuum pump exhaust. 0.25" - 0.38" ID. Shipping weight 0.5 lb. (0.2 kg)

Diaphragm Pumps
For drying train circulation. Single cylinder, oil-free diaphragm pumps with permanently lubricated bearings and mounted on rubber feet. Provide 206 mBar ultimate vacuum. 1/8 hp motor. Die cast aluminum. 1/4" diameter inlet and outlet connections. Dimensions: 4.8" w x 8.0" d x 7.0" h. Shipping weight 11 lbs. (5 kg)

Catalog Number	Description
5248200	Diaphragm Pump for 115 volt, 60 Hz, 3.3 amp operation. With switch. 42 L/minute displacement capacity.
5248201*	Diaphragm Pump for 230 volt, 50 Hz, 1.5 amp operation. 35 L/minute displacement capacity.

**International electrical configuration*

Precise™ Glove Boxes & XPert® Weigh Boxes

GENERAL ACCESSORIES

Gloves, Sleeves and Hands

Neoprene Gloves
One piece, seamless, 0.015 gauge. With O-rings. One pair of size 9 3/4 is included with each Precise Glove Box.

Catalog Number	Description	Shipping Wt.
5005500	Size 8 1/2, one pair	3 lbs. (1.4 kg)
5005600	Size 9 3/4, one pair	3 lbs. (1.4 kg)

Butyl Gloves
One piece, seamless, 0.015 gauge. Provide high impermeability to water vapor, gases and toxic chemicals. Resistant to oxygenated solvents and most oxidizing chemicals. With O-rings.

Catalog Number	Description	Shipping Wt.
5005501	Size 8 1/2, one pair	3 lbs. (1.4 kg)
5005601	Size 9 3/4, one pair	3 lbs. (1.4 kg)

CSM Gloves
Chlorosulfonated polyethylene rubber, also known as Hypalon. One piece, seamless, 0.015 gauge. Resistant to abrasion, ozone and oxidizing chemicals. With O-rings.

Catalog Number	Description	Shipping Wt.
5005502	Size 8 1/2, one pair	3 lbs. (1.4 kg)
5005602	Size 9 3/4, one pair	3 lbs. (1.4 kg)

5005603 Latex Gloves
Size 9 3/4. One piece, seamless, 0.015 gauge. For use when dexterity is needed. Limited protection. With O-rings. One pair. Shipping weight 3 lbs. (1.4 kg)

5005800 Neoprene Straight Sleeves
For use with any Hands listed below. With O-rings and springs. Shipping weight 3 lbs. (1.4 kg)

5005900 Neoprene Accordion Sleeves
For use with any Hands listed below. With O-rings and springs. Shipping weight 3 lbs. (1.4 kg)

Neoprene Hands
Lightweight Hands, embossed with firm-hold finish. For use with either Neoprene Straight or Accordion Sleeves. 0.017 gauge.

Catalog Number	Description	Shipping Wt.
5006000	Size 7 1/2, package of 12 pair	2 lbs. (0.9 kg)
5006100	Size 9, package of 12 pair	2 lbs. (0.9 kg)
5033100	Size 10, package of 12 pair	2 lbs. (0.9 kg)

Latex Hands
White, surgical-type Hands. For use with either Neoprene Straight or Accordion Sleeves. 0.009 gauge.

Catalog Number	Description	Shipping Wt.
5006200	Size 7, package of 12 pair	2 lbs. (0.9 kg)
5006300	Size 9, package of 12 pair	3 lbs. (1.4 kg)

5225701 Add-A-Valve Kit

Includes the manual ball valve, compression fitting, hose connector fitting, O-ring and nut to add a service valve to the main chamber or transfer chamber. **Requires installation and 0.688" diameter hole.** Precise Controlled Atmosphere Glove Boxes include six manual valves. Shipping weight 1 lb. (0.5 kg)

5225703 Add-A-Valve Installation Kit

Includes 0.688" diameter holesaw, arbor and instructions. Shipping weight 0.5 lb. (0.2 kg)

5236600 Valve Identifier Label Set

Includes labels for two VAC, GAS, IN, OUT, AR, NIT, AIR, CO2 and CW. For use when adding service valve(s). Shipping weight 0.5 lb. (0.3 kg)

Electrical Power Strips

Provide electrical receptacles for connecting instruments and equipment inside the glove box. Include an electrical cord and plug, which may be plugged into the glove box's interior electrical duplex receptacle. Shipping weight 3 lbs. (1.4 kg)

Catalog Number	Description
5211500	U.S. Electrical Configuration, 115 volts, 5 amps, 4 receptacles
5210600	United Kingdom Electrical Configuration, 250 volts, 2 amps, 6 receptacles
5290400	European Electrical Configuration, 250 volts, 2 amps, 4 receptacles
5332600	Australian Electrical Configuration, 250 volts, 2 amps, 6 receptacles

5075619 Electrical 9 Pin Sealed Pass-Through Kit

Provides a leak-tight connection for data transfer to a customer-supplied printer or computer located outside the glove box. Includes sealed 9 pin connector (D-subminiature with male pins on one side and female pins on the other) and 10' cord. **Requires installation and drill hole.** Installation Kit 5241100 is recommended. Shipping weight 1 lb. (0.5 kg)

5241100 Electrical 9-Pin Pass-Through Installation Kit

Includes drill bits and holesaws for installing 5075619 Electrical 9 Pin Sealed Pass-Through. Shipping weight 0.5 lb. (0.3 kg)

5240700 Mechanical or Electrical Pass-Through Kit

Provides three pass-through ports with sealing ID ranges 0.230/0.395, 0.230/0.530 and 0.450/0.705, useful for sealing cords and plumbing. **Requires installation and drill holes.** Installation Kit 5240800, with drill bits, is recommended. Shipping weight 0.5 lb. (0.2 kg)

5240800 Installation Kit for Mechanical or Electrical Pass-Through

Includes drill bits for installing 5240700 Mechanical or Electrical Pass-Through. Shipping weight 0.5 lb. (0.3 kg)

5236100 Acrylic Viewing Window

Acrylic, 29.5" w x 15.6" h x 0.5" thick, with powder-coated steel frame, replaces standard laminated glass window. Shipping weight 20 lbs. (9 kg).

Anti-Static Ionizer Fan

Circulate ionized air inside the glove box to reduce static charge. Include hardware to mount to the main chamber ceiling. **Require installation.** Included with XPert Weigh Boxes.

Catalog Number	Description	Shipping Weight
5234400	For 100/115 volt, 50/60 Hz operation	5 lbs. (2 kg)
5234401*	For 230 volt, 50/60 Hz operation	5 lbs. (2 kg)

5234600 Balance Vibration Isolator

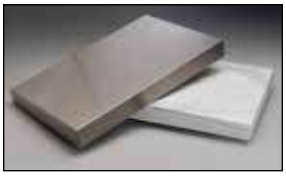

Minimizes vibration to sensitive balances. Includes a 13.4" w x 20.4" d x 2.7" thick marble slab, four isolator pads, and a type 304 stainless steel protective cover. Included with XPert Weigh Boxes. Shipping weight 75 lbs. (34 kg)

Vacuum Aspirator Kits

Evacuate fluid spills in the glove box interior. Chemical-resistant diaphragm pump draws 12 liters/minute with on/off switch and manual/foot pedal control switch. Autoclavable, two-liter glass container allows safe collection and disposal of hazardous liquids. Float valve automatically seals the container to prevent overfilling and backflow into the pump. A 0.2 µm filter traps airborne particulates, preventing pump contamination. Housed in compact case with handle. Include silicone tubing, pipetting holder, pipette tips and drain valve. **Require installation and 0.688" dia. drill hole** in glove box wall to route tubing from glove box interior to remotely-located pump. Overall dimensions: 13" w x 6.8" d x 15" h.

Catalog Number	Description	Shipping Weight
5241800	For 115 volt, 60 Hz, 0.4 amp operation	23 lbs. (10 kg)
5241801*	For 230 volt, 50/60 Hz, 0.2 amp operation	23 lbs. (10 kg)

**International electrical configuration*

Interior Storage Shelf Kits

5235000 *Rear Shelf Kit*

5235001 *Left Side Shelf Kit*

Provide convenient storage in the rear or left side of the main chamber to maximize space. Each Kit adds 240 square inches of usable space (an additional 25%). Four stainless steel shelves and powder-coated steel vertical uprights. **Require assembly.**

Catalog Number	Description	Shipping Weight
5235000	**Rear Shelf Kit,** with stainless steel slotted back for mounting Hanging Shelf Kits (sold separately). Assembled dimensions: 22.2" w x 20.0" h x 4.4" d	20 lbs. (9 kg)
5235001	**Left Side Shelf Kit,** Assembled dimensions: 21.2" w x 20.0" h x 4.4" d	15 lbs. (7 kg)

5242100 IV Bar Kit

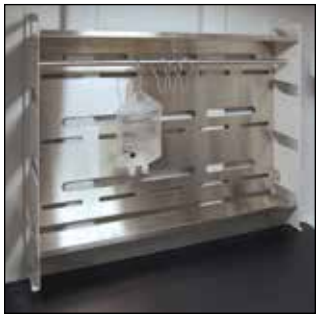

Supports intravenous solution bottles and bags. Includes 21.2" long stainless steel bar, mounting hardware and four snap hooks. **Requires Shelf Kit 5235000 or 5235001** (not included). Shipping weight 5 lbs. (2.2 kg).

5242200 Exterior Glove Port Covers

May be placed over glove ports with or without gloves attached to facilitate evacuate/fill operations and preserve inert atmosphere. Molded rubber. Includes two clamps. Set of two. Shipping weight 3.5 lbs. (1.6 kg)

Hanging Storage Accessories

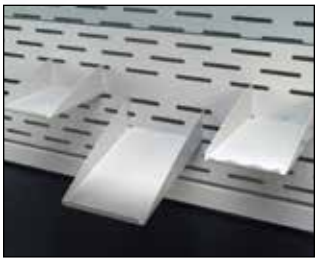

3925000 *Utility Shelves*

3927700 *Bottle Holder*

3927800 *Tissue Holder*

5247300 *Organizer Bin*

Attach to slotted back of Rear Shelf Kit 5235000 (sold separately).

Catalog Number	Description	Shipping Weight
3925000	***Utility Shelves.*** Consist of three powder-coated steel shelves that hold a printer, utensils and other miscellaneous supplies. The utensil shelf has a scalloped front edge to support spatulas, brushes and other items.	5 lbs. (2 kg)
3927700	***Bottle Holder.*** Powder-coated steel holder with 3" diameter opening holds a squirt bottle or other round container.	1 lb. (0.5 kg)
3927800	***Tissue Holder.*** Powder-coated steel holder accommodates a box of tissues in the upside down or upright position. An opening in the holder permits wipes to be dispensed from the bottom.	1 lb. (0.5 kg)
5247300	***Organizer Bin.*** Plastic, 5.4" container holds miscellaneous small items.	0.5 lb. (0.2 kg)
5247301	***Organizer Bin.*** Plastic 7.4" container holds miscellaneous small items.	0.5 lb. (0.2 kg)

5245900 Exterior Transfer Chamber Shelf

Powder-coated steel shelf, 10.7" w x 15.1" deep, mounts to top of transfer chamber to maximize exterior work area. Shipping weight 8 lbs. (3.6 kg)

Remote Blowers

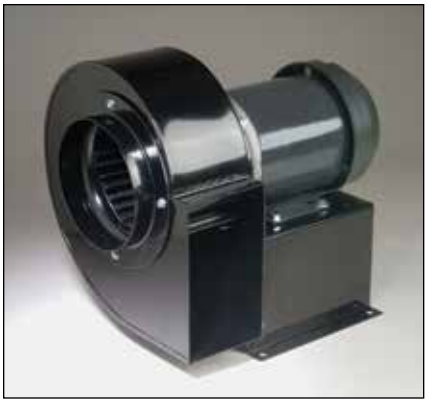

For ducting Precise HEPA-Filtered Glove Boxes or XPert Weigh Boxes. May also be used with Precise Controlled Atmosphere or Basic Glove Boxes to exhaust the pressure relief valve. Direct drive blower has a 1/4 hp TEFC-type motor and overcomes external static pressure of 0.5" at 420 CFM. Housing and impeller are corrosion-resistant, phenolic-coated steel. Blower inlet is 5.94" OD and is sized to accept 6" nominal diameter PVC duct. Blower outlet is 4.25" x 7.38" OD. Dimensions: 14.6" w x 13.5" d x 13.25" high. **Damper is required.**

CFM @ Static Pressure – Inches of H_2O						
S.P.	0.0"	0.125"	0.25"	0.50"	0.75"	0.87"
CFM	595	560	515	420	300	167

Remote Blowers

Catalog Number	Electrical Requirements	Shipping Weight
4863500	115 volts, 60 Hz, 4.4 amps	35 lbs. (16 kg)
4863501*	115/230 volts, 50 Hz 5.6/2.8 amps	35 lbs. (16 kg)

**International electrical configuration*

Dampers

Catalog Number	Description	Shipping Weight
4724200	6" diameter. PVC.	1 lb. (0.5 kg)
3924000	6" diameter. Powder-coated steel.	1 lb. (0.5 kg)

5242000 Guardian Jr. Airflow Monitor

For monitoring exhaust airflow on Precise HEPA-Filtered Glove Boxes or XPert Weigh Boxes or airflow from the pressure relief valve on Precise Basic or Controlled Atmosphere Glove Boxes. Alerts the operator to airflow conditions outside of preset range. Includes face plate with circuit board, electrical power pack, vinyl tubing, airflow tube adapter and powder-coated steel casing. From the monitor's face plate, the operator can easily select and calibrate a setpoint between 30 and 250 fpm using a velocity meter and a screwdriver. If the face velocity falls below the setpoint for more than 6 seconds, an audible alarm sounds and the ALERT indicator glows red. The TEST RESET switch, when pressed, mutes the alarm. Mounts to top of glove box. **Requires installation.** For 100/115/230 volts, 50/60 Hz operation. Shipping weight 10 lbs. (4.5 kg)

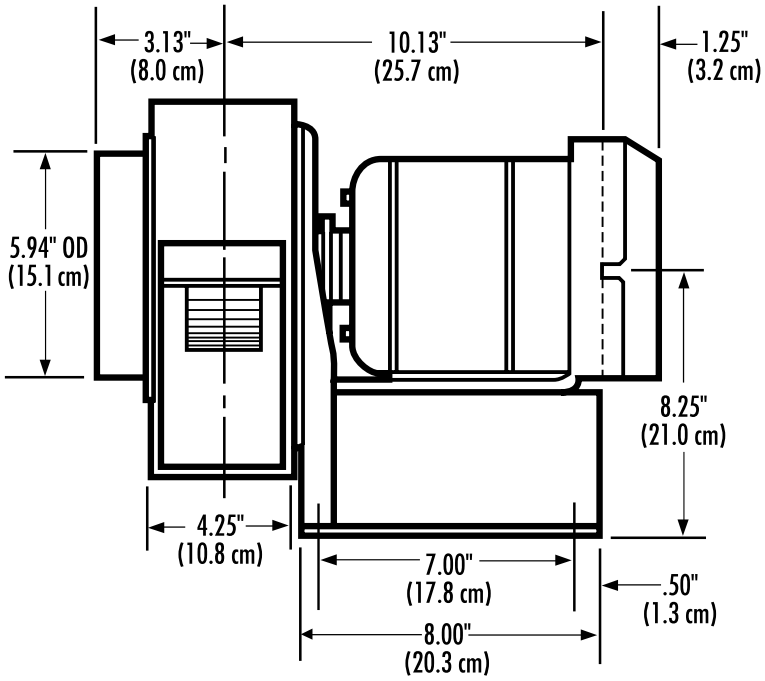

FRONT

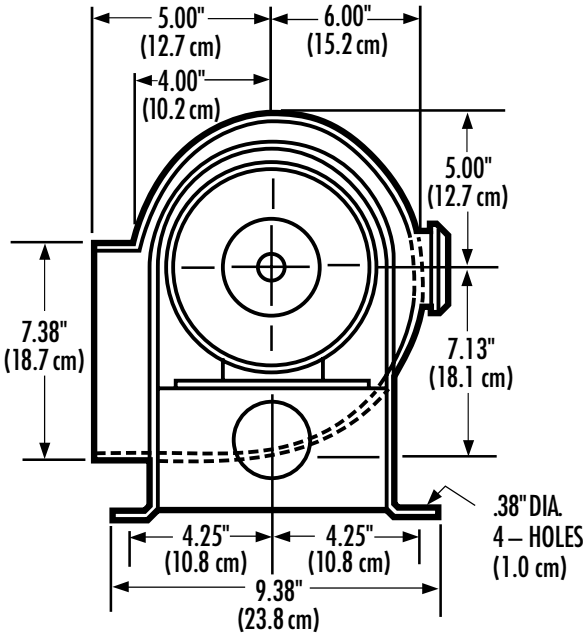

SIDE

Adjustable Height Base Stands

Support Precise Glove Boxes. Available with leveling feet or casters. Durable 2" tubular glacier white powder-coated steel frame has lower shelf, 47" w x 18" d, to accommodate accessory equipment such as a pump. Telescoping legs adjust in 1" increments to seven overall height positions from 33.0" to 40.0". Black laminate hard board work surface is permanently mounted to the frame. Overall dimensions: 60.0" w x 31.0" d.

Catalog Number	Description	Shipping Weight lbs. (kg)
5235500	Adjustable Height Mobile Base Stand with 5" casters	225 lbs. (102 kg)
5235501	Adjustable Height Stationary Base Stand with leveling feet	225 lbs. (102 kg)

5235500 Adjustable Height Mobile Base Stand

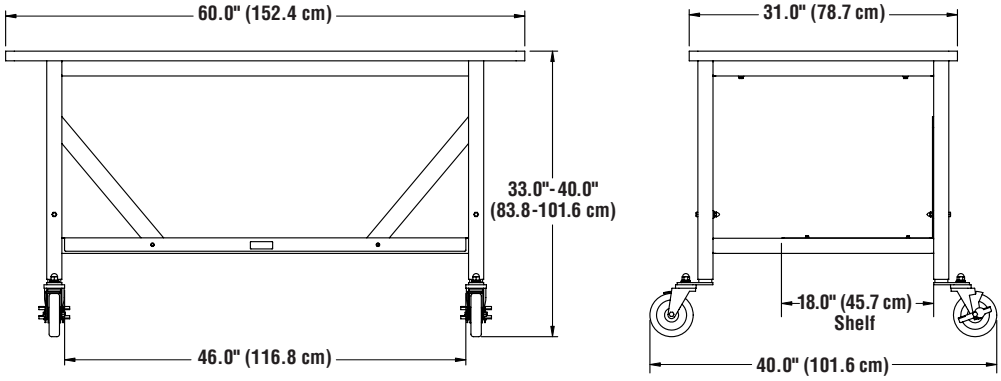

5235501 Adjustable Height Stationary Base Stand

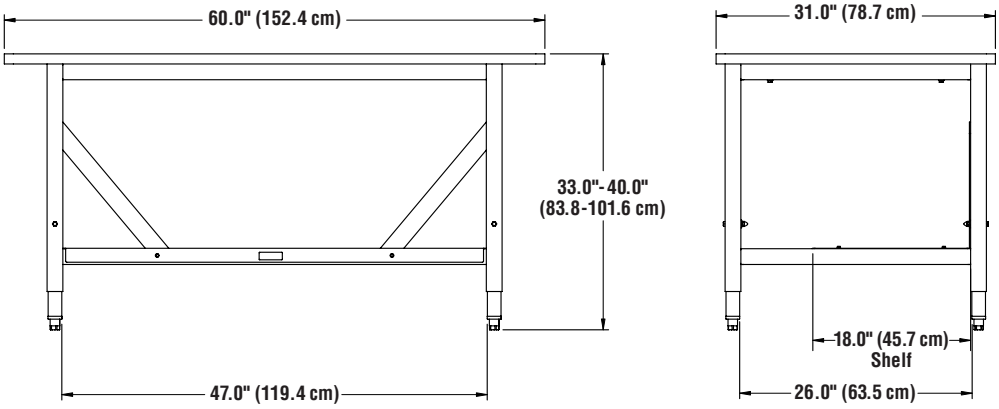

9900200 Protector Standard Base Cabinet

Two Protector Standard Cabinets may be placed side by side to support Precise Glove Boxes. **Work surface is required** (sold separately). Durable glacier white powder-coated steel construction. Manual-closing, non-locking doors. Includes four leveling feet and one 8" filler panel to increase cabinet depth from 22" to 30" Interior Optional Shelf Kit is sold separately. Shipping weight 155 lbs. (70 kg)

9919102 Interior Shelf Kit

Includes powder-coated steel shelf and mounting hardware. Shelf may be mounted at one of three heights: 13.5", 15.25" and 17.0". Shipping weight 10 lbs. (4.5 kg)

4882807 Black Epoxy Flat Work Surface

May be placed atop two Protector Standard Base Cabinets to support Precise Glove Boxes. Solid epoxy resin. Dimensions: 60.0" w x 30.0" d x 1.25" thick. Shipping weight 135 lbs. (61 kg)

9900200 Protector Standard Base Cabinet

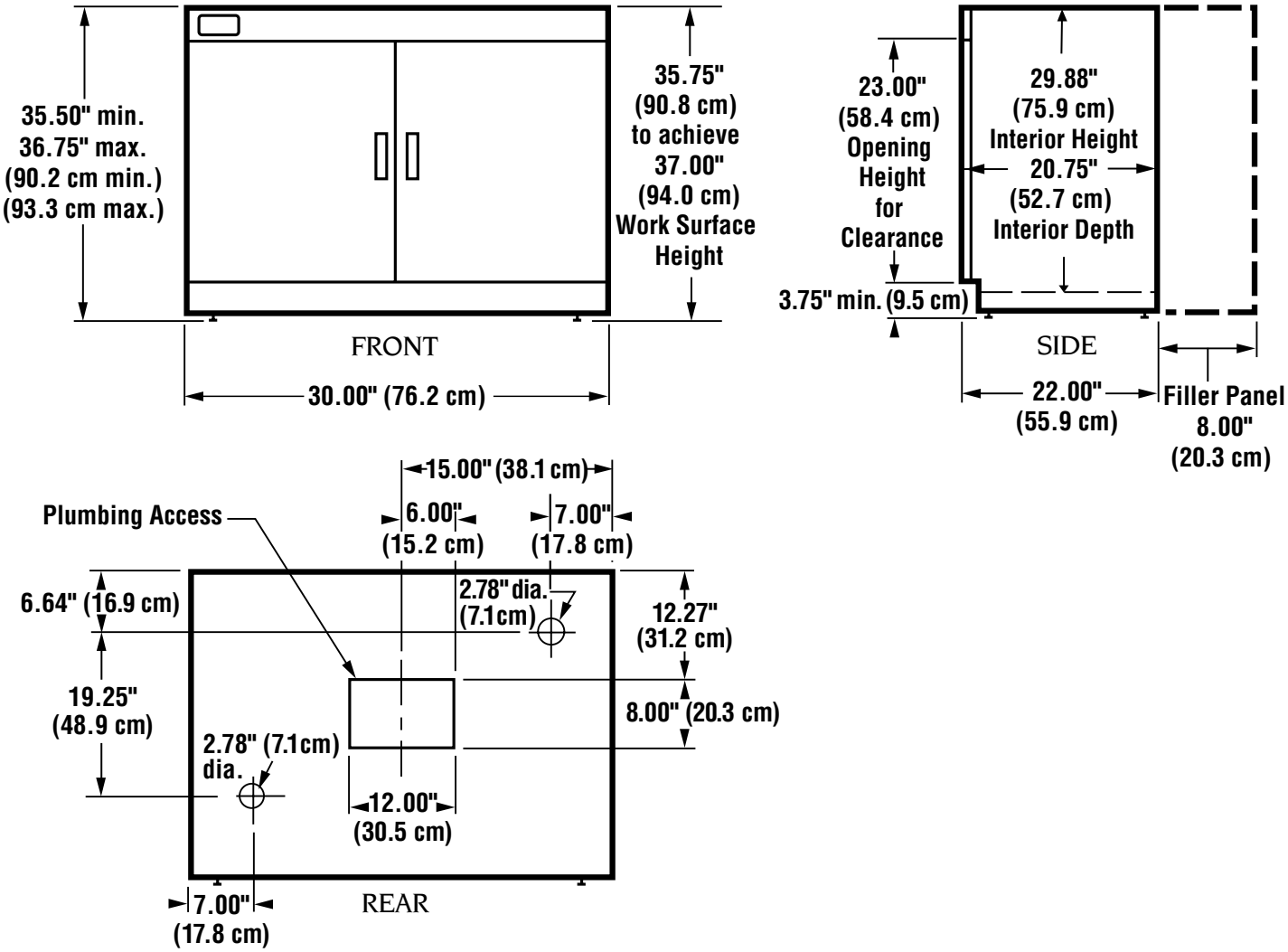

Contact Labconco for more information about these quality products for your laboratory.

Glove Boxes

Biological Safety Cabinets, Clean Benches & Enclosures

Laboratory Animal Research Stations

Fume Hoods & Carbon-Filtered Enclosures

Balance & Bulk Powder Enclosures

Glassware Washers

Water Purification Systems

Freeze Dry Systems

Centrifugal Vacuum Concentrators & Cold Traps

Multiple Sample Evaporation Systems

Agricultural Chemistry Products

Laboratory Carts & Benches

Blood Drawing Chairs

Forensic Enclosures

Vacuum Desiccator

Protecting your laboratory environment

LABCONCO

©2008 by Labconco Corporation
Printed in the U.S.A.
Product design subject to change without notice

3-17-1/08-GraphX-10M-R1

Update 5/31/16